23.Fuel Filler Pipe

A: REMOVAL

WARNING:
Place "NO OPEN FLAMES" signs near the working area.

CAUTION:
Be careful not to spill fuel.

1) Set the vehicle on a lift.
2) Disconnect the ground cable from the battery.

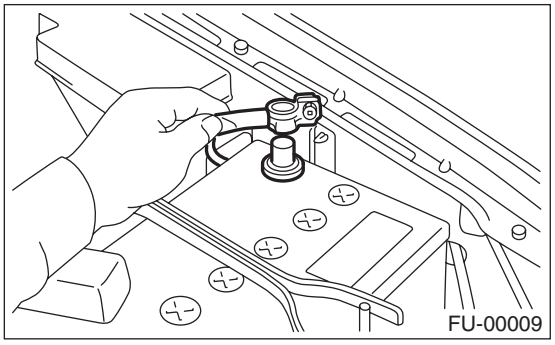

3) Open the fuel filler flap lid, and remove the filler cap.
4) Remove the screws which secure gasket.

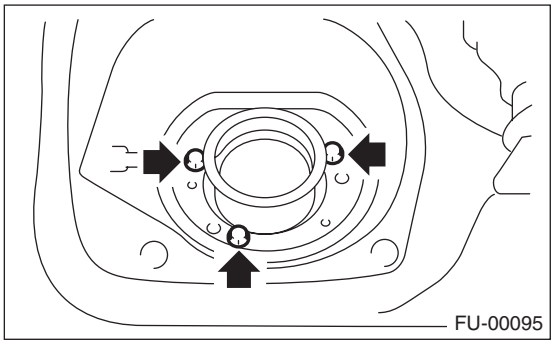

5) Remove the rear wheel RH.
6) Lift up the vehicle.
7) Drain fuel from fuel tank. <Ref. to FU(H4SO)-43, DRAINING FUEL, PROCEDURE, Fuel.>
8) Remove the fuel filler pipe protector.

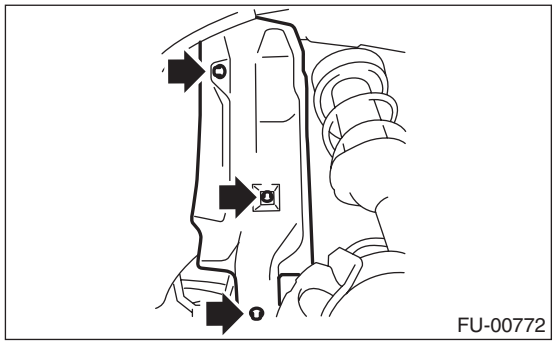

9) Disconnect the evaporation hose from the clip of fuel filler pipe.

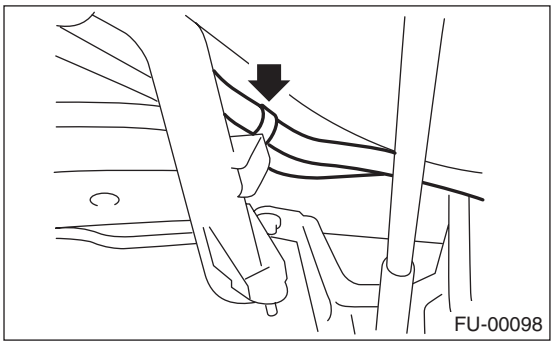

10) Disconnect the evaporation hose from the fuel pipe.

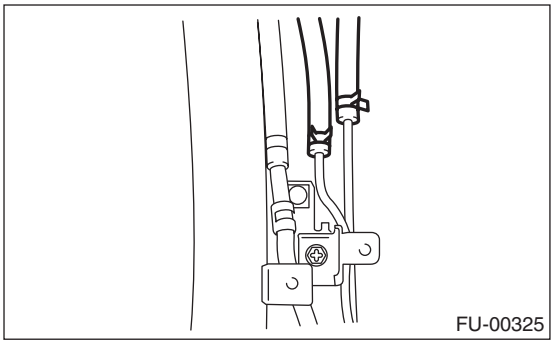

11) Remove the bolts which hold fuel filler pipe bracket on the body.

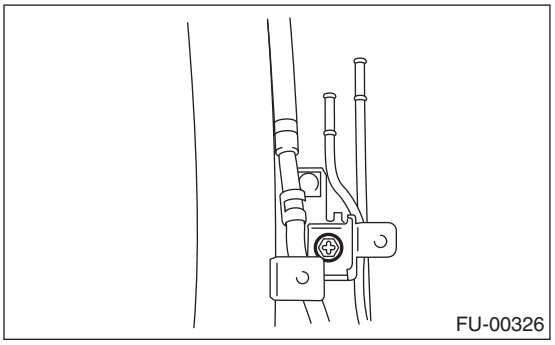

12) Loosen the clamp and disconnect the fuel filler hose (A) from the fuel filler pipe.
13) Move the clip and disconnect the evaporation hose (B).

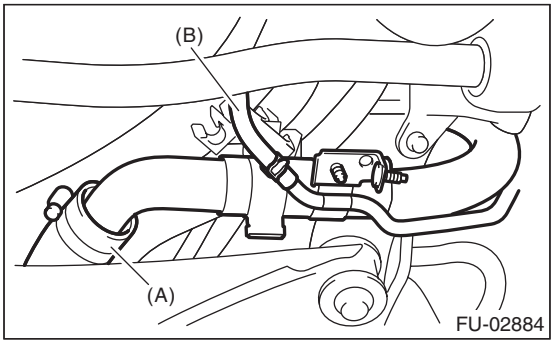

14) Remove the fuel filler pipe to the underside of the vehicle.

15) Remove the evaporation pipe together with the clip from the vehicle body.

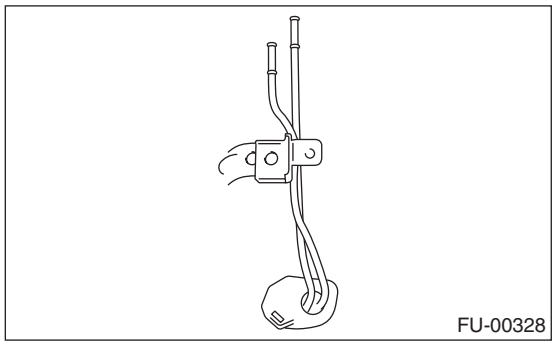

B: INSTALLATION

1) Open the fuel filler flap lid.
2) Set the fuel saucer (A) with rubber seal (C), and insert the fuel filler pipe into hole from the inner side of apron.
3) Align the holes in fuel filler pipe neck and set the cup (B), and tighten the screws.

NOTE:
If the edges of rubber seal are folded toward the inside, straighten it with a screwdriver.

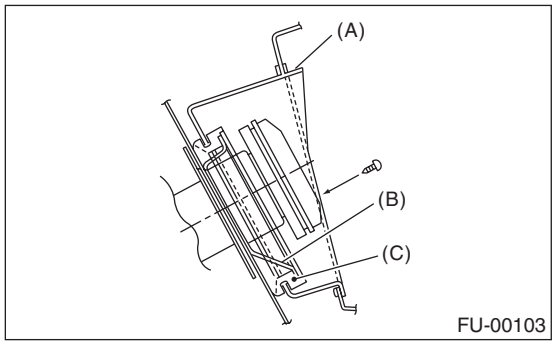

4) Connect the evaporation pipe.

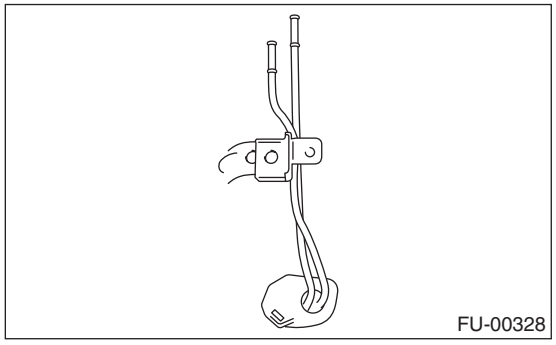

5) Connect the evaporation hose to the fuel pipe.

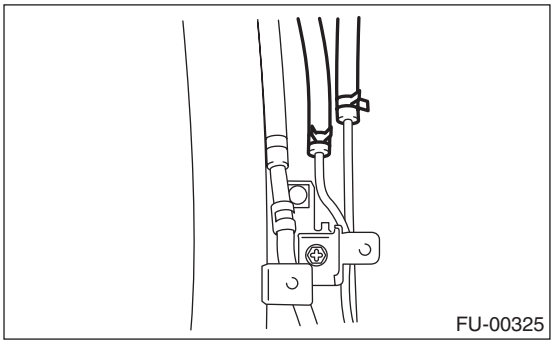

6) Connect the fuel filler hose (A) to the pipe with an overlap of 35 — 40 mm (1.38 — 1.57 in).
7) Connect the evaporation hose (B) to the pipe with an overlap of 25 — 30 mm (0.98 — 1.18 in).

CAUTION:
Do not allow clip to touch the evaporation hose (B) and rear suspension crossmember.

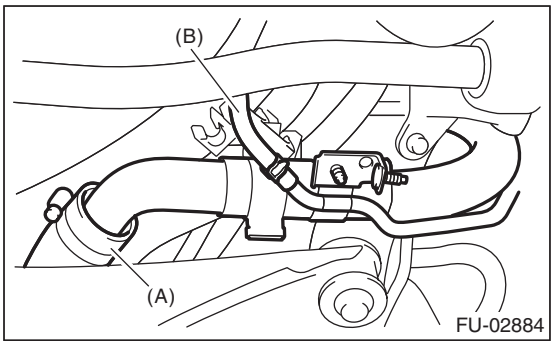

L = 27.5±2.5 mm (1.083±0.098 in)

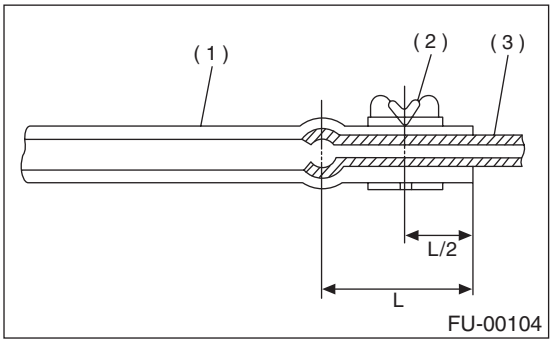

(1) Hose
(2) Clip
(3) Pipe

8) Tighten the bolts which hold fuel filler pipe bracket on the body.

Tightening torque:
7.5 N·m (0.76 kgf-m, 5.5 ft-lb)

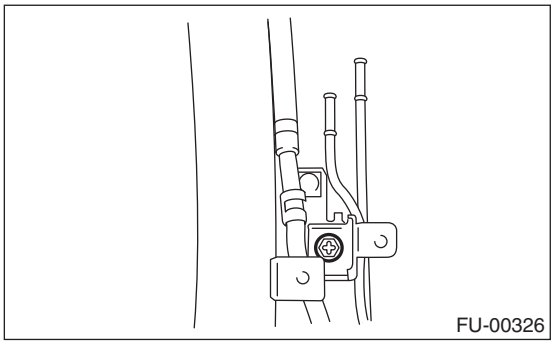

9) Fasten the evaporation hoses to the clip of fuel filler pipe.

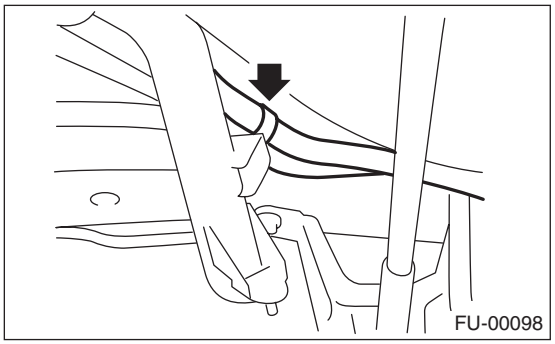

10) Install the fuel filler pipe protector.

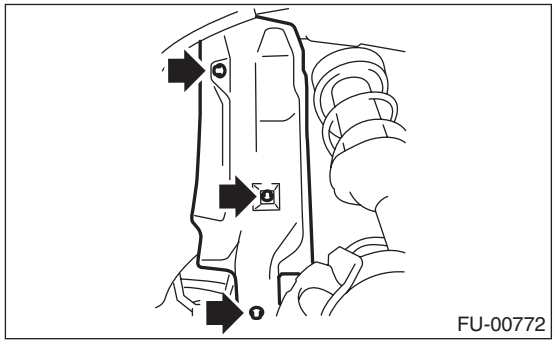

11) Lower the vehicle.
12) Install the rear wheel RH.

Tightening torque:
100 N·m (10.2 kgf-m, 73.8 ft-lb)

13) Connect the ground cable to the battery.

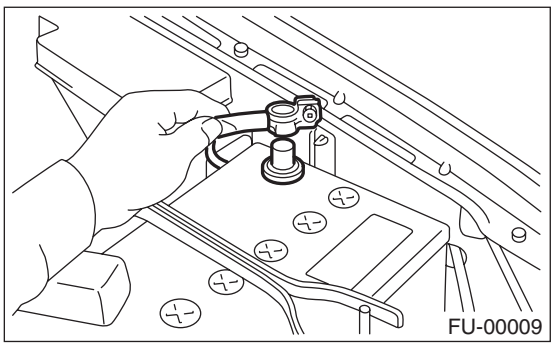

C: DISASSEMBLY

1) Move the clamp and disconnect the evaporation hose from the joint pipe.

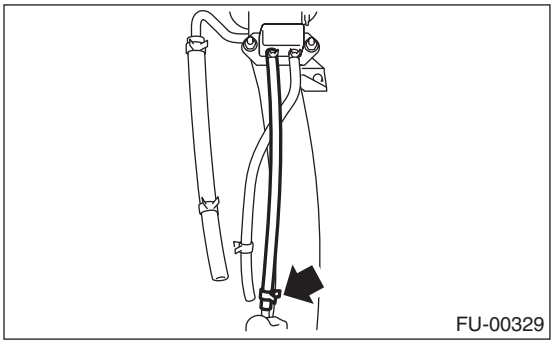

2) Remove the bolt which installs joint pipe to the fuel filler pipe.

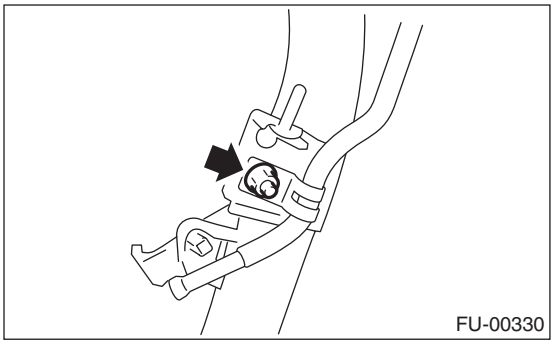

3) Disconnect the evaporation hose from the fuel filler pipe.

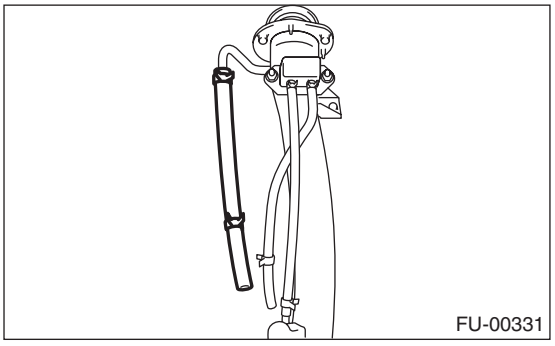

4) Remove the shut valve from the fuel filler pipe.
<Ref. to EC(H4SO)-15, REMOVAL, Shut Valve.>

D: ASSEMBLY

1) Install the shut valve to the fuel valve pipe. <Ref. to EC(H4SO)-15, INSTALLATION, Shut Valve.>
2) Connect the evaporation hose to the fuel filler pipe.

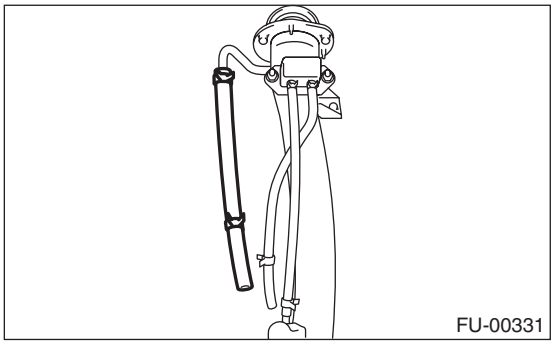

3) Connect the evaporation hose to the evaporation pipe.

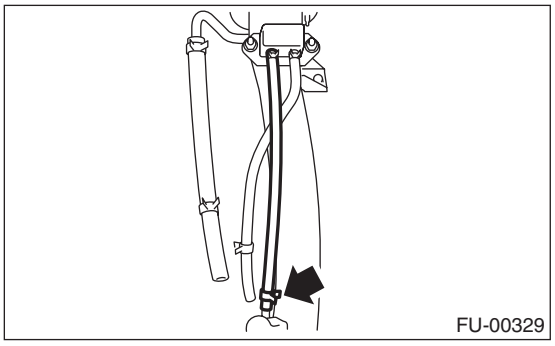
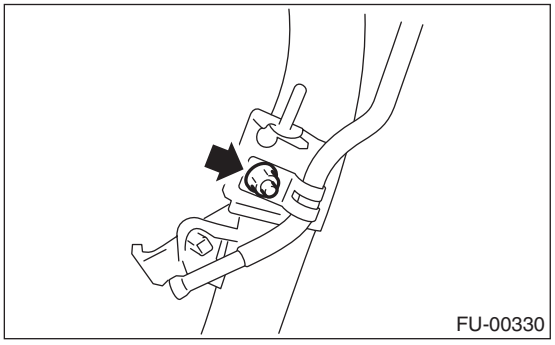
4) Connect the evaporation pipe to the fuel filler pipe.